Copying of this document,and giving it to others and the use or communication of the contents thereof,are forbidden without express authority.All rights reserved.

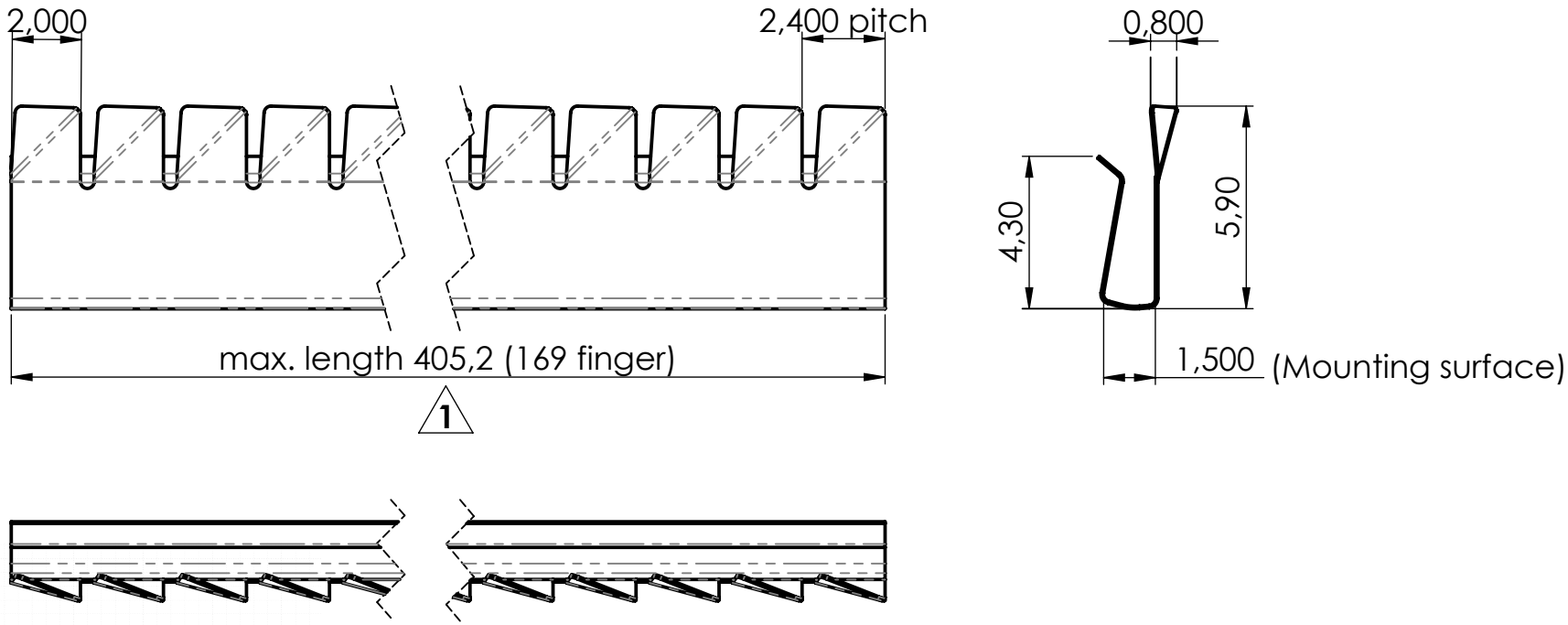

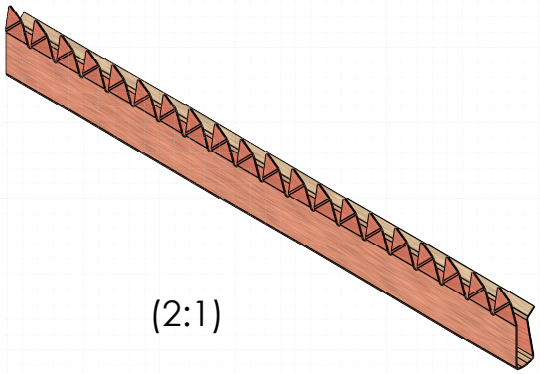

1 **Stripes can be cut off after each finger on request.**
Calculation of length in mm:
strip length = number of fingers x 1 pitch - 1 slot

drawing for customer information

FEUERHERDT EMI Shielding Products Specialist for Contact Springs	tolerances: X,X ± 0,5 X,XX ± 0,2 X,XXX ± 0,1	length tolerance: 100-300 ± 0,5 300-400 ± 0,8 400-500 ± 1 > 500 ± 1,5	dimensions in mm unmeasured contours according to 3D data	scale: 5:1	revision: 00	
				material:	rawmaterial: CuBe 2, 1/2H finalstate: CuBe 2, 1/2HT	
		date:	name:	description:		
		created 15.06.20	Gutmann	type X10		
		checked 17.06.20	Pröhl			
		released				
		surface code:		drawing number:		A4
		bright finish -02 gold -03 silver -04	zink chromate/ clear -15 bright tin -17 bright nickel -19	TC.018.15.C		sheet: 1
rev.	description	date	name	thickness: t= 0,08	replacementdrawing:	