Copying of this document,and giving it to others and the use or communication of the contents thereof,are forbidden without express authority.All rights reserved.

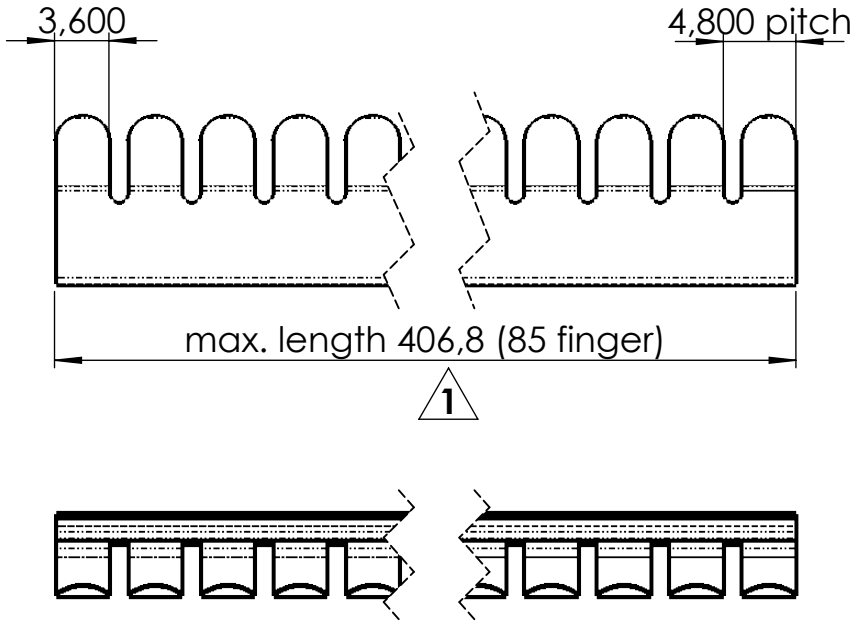

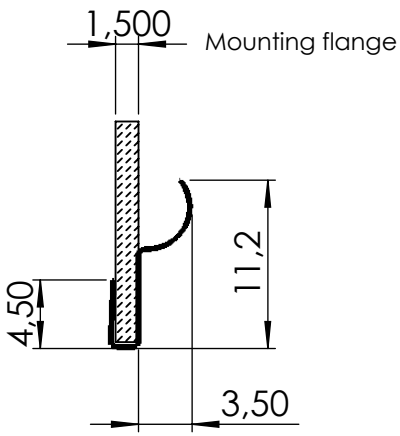

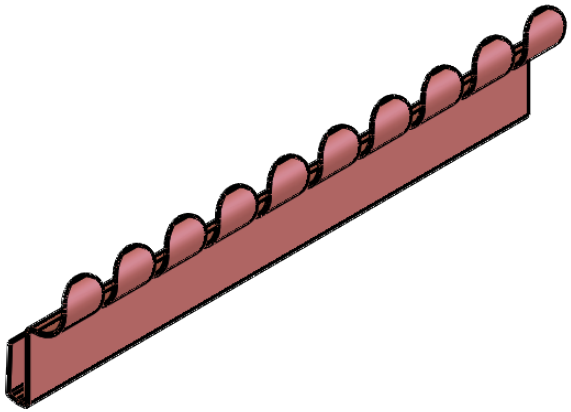

drawing for customer information

FEUERHERDT EMI Shielding Products Specialist for Contact Springs	tolerances: X,X ± 0,5 X,XX ± 0,2 X,XXX ± 0,1	length tolerance: 100-300 ± 0,5 300-400 ± 0,8 400-500 ± 1 > 500 ± 1,5		dimensions in mm unmeasured contours according to 3D data	scale: **2:1**	revision: **00**	
					material:	**rawmaterial: CuBe 2, 1/2H** **finalstate: CuBe 2, 1/2HT**	
			date:	name:	description:		
		created	23.07.20	**Gutmann**	**type CL3-2**		
		checked	17.08.20	**Pröhl**			
		released					
		surface code:					
		bright finish -02		**zink chromate/**	drawing number:		**A4**
		gold -03		**clear -15**	**CO.008.15.C**		
		silver -04		**bright tin -17**			**sheet: 1**
				bright nickel -19			
rev.	description	date	name	thickness: t= **0,127**	**replacementdrawing:**		

1 **Stripes can be cut off after each finger on request.**
Calculation of length in mm:
strip length = number of fingers x 1 pitch - 1 slot