Copying of this document,and giving it to others and the use or communication of the contents thereof,are forbidden without express authority.All rights reserved.

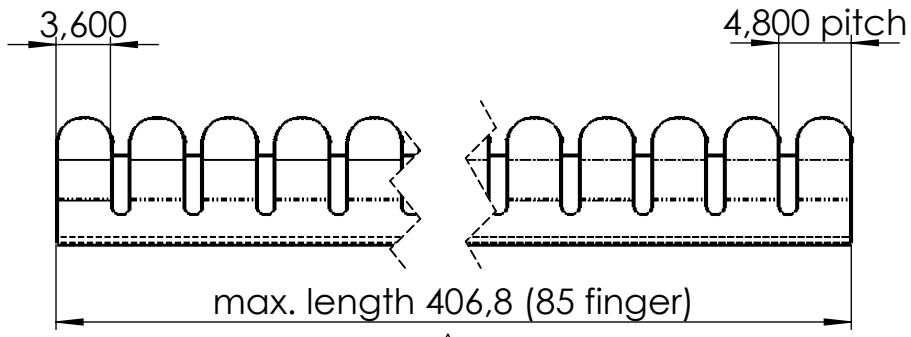

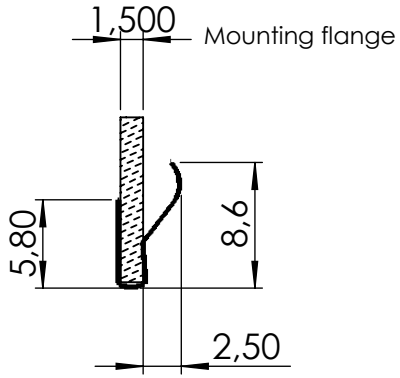

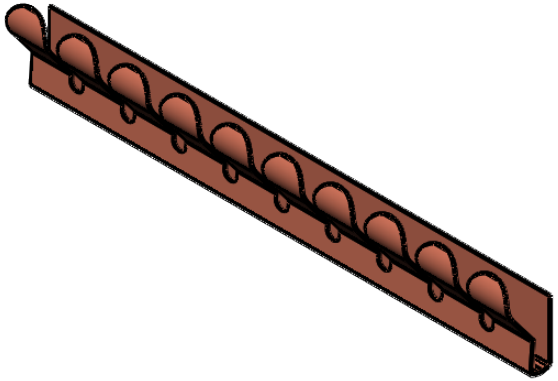

1 **Stripes can be cut off after each finger on request.**
Calculation of length in mm:
strip length = number of fingers x 1 pitch - 1 slot

drawing for customer information

FEUERHERDT EMI Shielding Products Specialist for Contact Springs	tolerances: X,X ± 0,5 X,XX ± 0,2 X,XXX ± 0,1	length tolerance: 100-300 ± 0,5 300-400 ± 0,8 400-500 ± 1 > 500 ± 1,5	dimensions in mm	scale: 2:1		revision: 00	
			unmeasured contours according to 3D data	material:	rawmaterial: CuBe 2, 1/2H finalstate: CuBe 2, 1/2HT		
			date:	name:	description: type CL17		
			created 03.09.20	Gutmann			
			checked 14.09.20	Pröhl			
			released				
			surface code: bright finish -02, gold -03, silver -04, zink chromate/ clear -15, bright tin -17, bright nickel -19		drawing number: CO.030.15.C		A4
rev.	description	date	name	thickness: t=0,1	replacementdrawing:		sheet: 1