Copying of this document,and giving it to others and the use or communication of the contents thereof,are forbidden without express authority.All rights reserved.

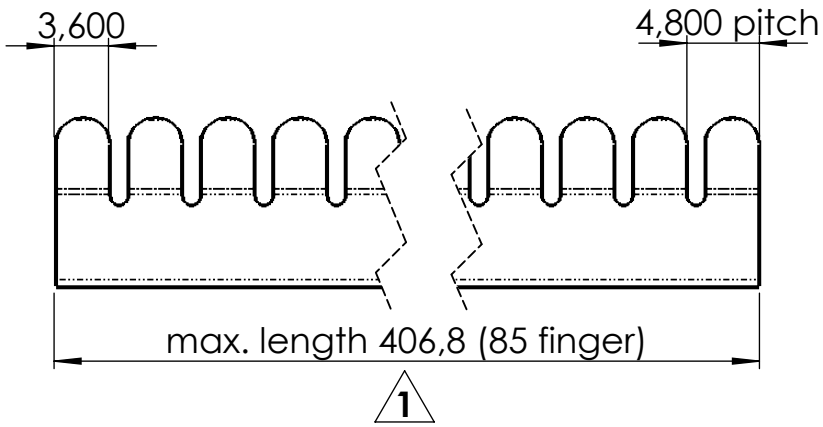

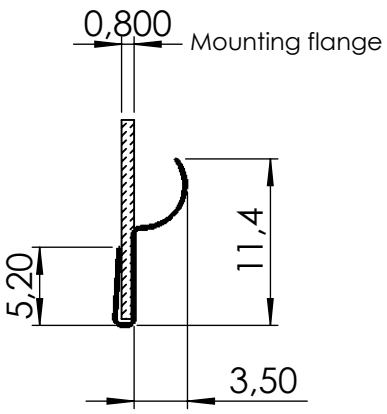

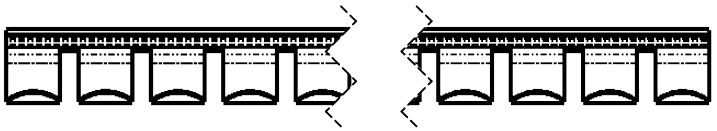

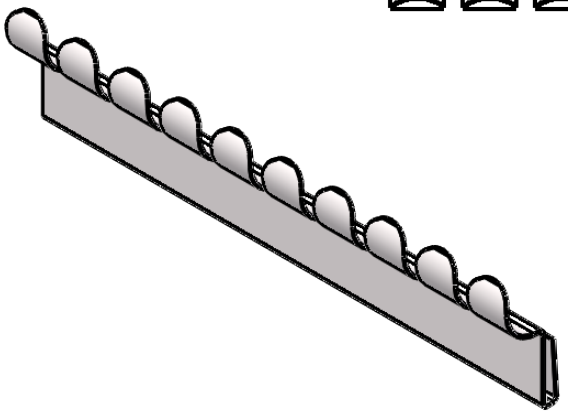

1 **Stripes can be cut off after each finger on request.**
Calculation of length in mm:
strip length = number of fingers x 1 pitch - 1 slot

drawing for customer information

FEUERHERDT EMI Shielding Products Specialist for Contact Springs	tolerances: X,X ± 0,5 X,XX ± 0,2 X,XXX ± 0,1	length tolerance: 100-300 ± 0,5 300-400 ± 0,8 400-500 ± 1 > 500 ± 1,5	dimensions in mm unmeasured contours according to 3D data	scale: 2:1	revision: 00	
				material: stainless steel 1.4310 X10CrNi18-8 F1100-1300		
			date:	name:	description:	
		created	09.03.22	Pröhl	type CL3	
		checked	09.03.22	Akrim		
		released				
		surface code:				
		bright finish -02 gold -03 silver -04	zink chromate/ clear -15 bright tin -17 bright nickel -19	drawing number: CO.008.08.E	A4 sheet: 1	
rev.	description	date	name	thickness: t= 0,12	replacementdrawing:	